ENGINEERS
AUSTRALIA

Teacher Development Program
Bringing schools and Engineering together

Preliminary Course – Engineered Products Module

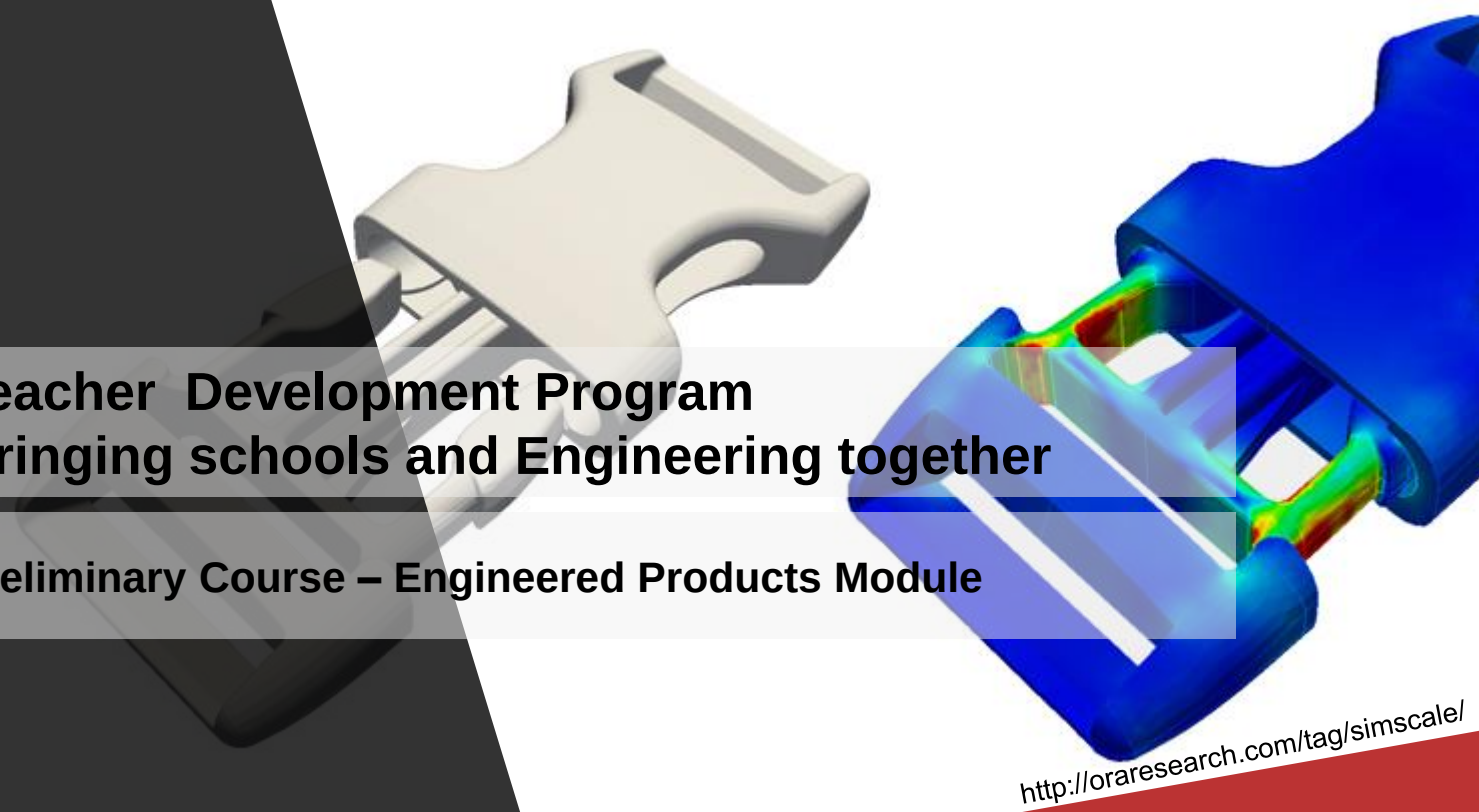
http://oraresearch.com/tag/simscale/

ENGINEERS
AUSTRALIA

This Module

Engineering Studies syllabus structure

Preliminary modules *120 hours indicative time	HSC modules *120 hours indicative time
Engineering application module 1 Engineering fundamentals	**Engineering application module** Civil structures
Engineering application module 2 Engineered products	**Engineering application module** Personal and public transport
Engineering application module 3 Braking systems	**Engineering focus module** Aeronautical engineering
Engineering focus module 4 Biomedical engineering	**Engineering focus module** Telecommunications engineering

The Syllabus-HSC Modules

ENGINEERS
AUSTRALIA

Student Learnings

Engineering application module 2: Engineered products

30 hours indicative time

Select one or more products as an introduction to engineering applications. Some products include: kettles, washing machines, toasters, portable power tools, irons, vacuum cleaners, wheelbarrows, sprinklers, garden implements, garden mulchers, lawnmowers and motor vehicles.

Outcomes

A student:

P1.1 identifies the scope of engineering and recognises current innovations

P2.1 describes the types of materials, components and processes and explains their implications for engineering development

P3.1 uses mathematical, scientific and graphical methods to solve problems of engineering practice

P3.2 develops written, oral and presentation skills and applies these to engineering reports

P3.3 applies graphics as a communication tool

P4.1 describes developments in technology and their impact on engineering products

P4.2 describes the influence of technological change on engineering and its effect on people

P4.3 identifies the social, environmental and cultural implications of technological change in engineering

P5.1 demonstrates the ability to work both individually and in teams.

Invention vs Innovation

P1.1 identifies the scope of engineering and recognises current innovations

- INVENTION – is about creating something “new”.

- INNOVATION – is about the “use” of an idea or method.

INVENTION is easier whilst INNOVATION is more difficult.

Design Method

P1.1 identifies the scope of engineering and recognises current innovations

1. Clarification of the need.
Analyse the problem, listing all the restrictions and constraints. This typically follows on from some initial research of a problem and/or identification of design requirements

2. Conceptual design phase.
Generate as many possible solutions to the design problem. From these possible solutions select a number of preferred options that have the greatest chance of achieving the desired objectives.

3. Embodiment/preliminary design phase.
Thorough engineering techniques including modelling and analysis to evaluate the preferred options against the design requirements in greater detail.

4. Detailed design phase.
Comprehensive evaluation and optimisation of the preferred design solution through engineering techniques including prototyping and testing.

Engineered Products

Historical development of electrical appliances?

- 1901 Engine-powered vacuum cleaner - a vacuum cleaner powered by an engine and mounted on a horse-drawn cart - teams of operators would reel the hoses into buildings to be cleaned
- 1907 First practical domestic vacuum cleaner - employs an electric fan to generate suction, rotating brushes to loosen dirt, a pillowcase for a filter, and a broomstick for a handle - as this heavy, clumsy invention was unsuccessful, the rights were sold the following year to William Hoover

Engineered Products

Historical development of electrical appliances?

- 1993 The first of James Dyson's vacuum cleaners based on cyclones launched:
- In the mid 1970s Dyson noticed how the bag of the Hoover vacuum cleaners based on bags clogged quickly
- He then noticed while visiting a large sawmill that cyclones were used to remove sawdust
- Between 1979 and 1984 he developed 5,127 prototype designs based on cyclonic removal of dust
- He struggled with the new design - Hoover wasn't interested because the vacuum cleaner bag market was worth $500m per year and Dyson was a threat to their profits
- In 1985 the Japanese company Ajax licensed the technology and marketed the G-force in Japan for $2000 – in 1991 it won an International Design Fair prize in Japan
- Using the income from this Dyson set up Dyson Appliances Ltd in 1991 and the DC01 became the biggest selling vacuum cleaner within 18 months of being launched in 1993
- Even though market research showed that people wouldn't be happy with a transparent container for the dust they went ahead and it turned out to be very popular and copied by others

Engineered Products

Using this example what is involved in developing a successful product?

- A problem
- Inspiration, innovation, creativity
- Developing a solution to the problem
- Engineering the solution
- Sweating, at times for years, to refine and prove the solution
- Obtaining funding
- Finding partners (in Dyson's case he had to initially partner with manufacturing companies)
- Testing the market (and at times ignoring the research?)
- Launching
- Understanding that you may initially fail
- Understanding your competition

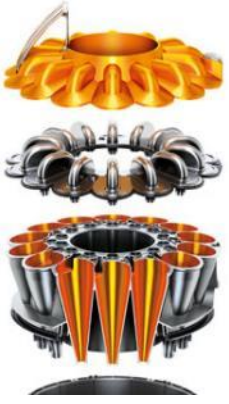

Engineered Products

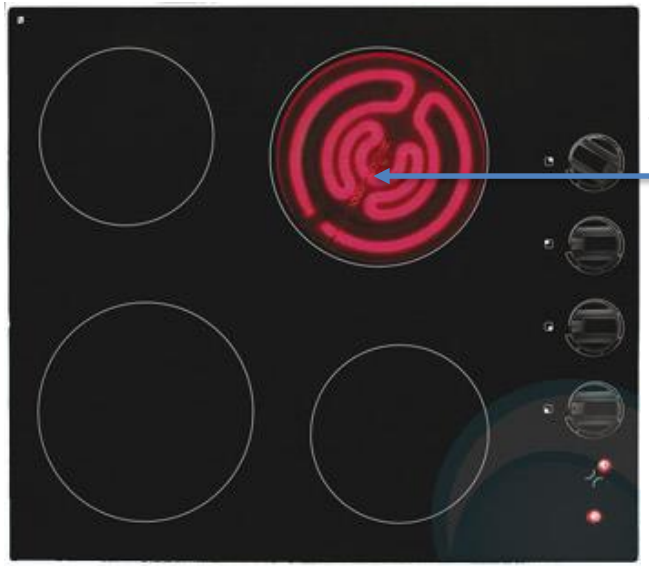

Radiant Heating Elements

Losses in the resistance of the elements heats the saucepan

Resistance, R

Losses from currents induced into the saucepan heats the saucepan

Inductance, L

Induction Heating Elements

Engineered Products

ENGINEERS
AUSTRALIA

Development of electrical appliances

- The washing machine

Weights used to hold machine down

Shock absorbers used to dampen oscillations

Engineered Products

Why is the electric car now successful (ask the students why the Tesla is successful)?

- Vision
- Driven (excuse pun) by an entrepreneurial engineer (Elton Musk)
- Excellent technology
- Selling a lifestyle

The time is right:

- Global warming
- Need to reduce carbon emissions (obtained a USD465m loan from US Dept of Energy)
- Oil companies now realise it is inevitable
- Battery technology
- Motor technology
- Computer and microprocessor technology
- …

Engineered Products

The Tesla Power Wall:

- Tesla realised that their battery technology could solve a problem in the electric power industry – the need to be able to store electric energy
- Clever marketing developed an opportunity in this, different, field
- Getting utilities on board

Engineered Products

The Apple iPad:

- A talented entrepreneur (Steve Jobs)
- A talented engineer (Johnathon Ive)
- Marriage of technology and art
- Vision – people did not know they needed an iPad until they had one
- Technology available from iPhone
- New products spun off - iBooks

Engineered Products

The Remote Controlled Drone:

- Why have these taken off (pun intended) in recent years?
    - New technology and materials available:
        - Light composite materials
        - Smaller energy dense batteries
        - Small high speed microprocessors
        - GPS chips
        - Smaller accelerometers and gyroscopes
        - Computerised flow dynamics (CFD)
        - allows better design of aerodynamics

Engineered Products

Sometimes developments are accidental:

- The post-it-note:
  - Spencer Silver was working in the 3M research laboratories in 1970 trying to find a strong adhesive. Silver developed a new adhesive, but it was even weaker than what 3M already manufactured. It stuck to objects, but could easily be lifted off. It was super weak instead of super strong.
  - No one knew what to do with the stuff, but Silver didn't discard it. Then one Sunday four years later, another 3M scientist named Arthur Fry was singing in the church's choir. He used markers to keep his place in the hymnal, but they kept falling out of the book. Remembering Silver's adhesive, Fry used some to coat his markers. Success! With the weak adhesive, the markers stayed in place, yet lifted off without damaging the page
- The microwave oven:
  - An American engineer, Percy Spencer, while working for Raytheon, walked in front of a magnetron, a vacuum valve used to generate microwaves, and noticed that the chocolate bar in his pocket melted
  - In 1945 after a few more experiments Spencer successfully invented the first microwave oven

Social & Environmental Implications

Electrical products have had a major impact on lives and living standards

- Productivity has increased significantly
- Salaries have increased accordingly
- Work is easier:
  - Robots in manufacturing
  - Robot vacuum cleaners at home?
- Entertainment is ubiquitous – available on devices at home, theater and on the run
- Methods of travel have developed significantly:
  - Fast train, planes and automobiles
  - Self driving cars
  - Uber (now available because of light, fast, mobile of computing power)
  - NRMA to develop apps to help in car pooling
- ….?

Social & Environmental Implications

Social:

- A smaller world due to faster international travel
- Work can be done anywhere
- New electronic “societies”
- The future of work?
- …

Environmental:

- Mass production has created a massive waste problem
- Recycling a new industry
- Rare materials being depleted and dispersed
- Anthropogenic modification of the climate
- Population health deteriorating from mass produced processed foods
- ….

Electric Motors

- The earliest practical motors were DC:
  - Mechanical commutator invented by the Englishman William Sturgeon in 1832
  - Methods developed to improve commutation
  - Improved brush performance
  - DC motors were preferred for transport and variable speed drives in rolling mills because of torque and speed characteristics and ease of reversing
  - DC motors were used in these roles into the 1980s
  - Originally supplied by DC generators but later by rectifiers and converters

DC Commutator

DC Motors in Rolling Mill

Electric Motors

- DC motors were replaced by AC motors in transport and rolling mils:
- The development of semiconductor converters and inverters allowed the superior torque and speed characteristics of DC machines to be emulated with AC machines
- The AC machines were far superior because of their low maintenance requirements
- AC motors:
  - Wound three phase stator winding
  - Rotors:
    - Wound rotor
    - Squirrel cage

Wound Rotor

Squirrel Cage

Electric Motors

- Universal motors:
  - Can operate on DC or AC
  - Is a commutated series wound motor
  - The stator's field coils are connected in series with the rotor windings through a commutator
  - Have high starting torque, can run at high speed, and are lightweight and compact.
  - Are commonly used in portable power tools and equipment, as well as many household appliances
  - https://www.youtube.com/watch?v=0PDRJKz-mqE

Electric Motors

- Motor development for products and appliances:
  - Electrically Commutated (EC) motors being introduced to reduce size, weight and noise
  - EC motors are brushless DC motors with external electronics
  - The rotor contains permanent magnets and the stator has a set of fixed windings
  - A circuit board continually switches the phases in the fixed windings to keep the motor turning
  - Because the speed of the motor is controlled by the commutation electronics, these motors are not limited to synchronous speeds

https://www.youtube.com/watch?v=bCEiOnuODac

Electric Motors

- Motor development for products and appliances:
  - The Dyson digital motor? https://www.youtube.com/watch?v=yajwmhe96pg
  - This is essentially an EC motor or a brushless DC motor or a permanent-magnet synchronous motor
  - Uses electronic switching circuits to control the current in the stator coils in a way that produces a rotating magnetic field that attracts and repels the rotor magnets in such a way as to turn the rotor

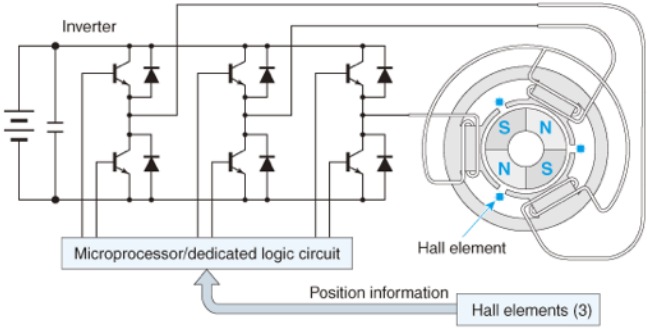

Electric Motors

- Other motors used in products and appliances:
  - Stepper motor:
    - Move in discrete steps
    - Have multiple coils that are organized in "phases”
    - By energizing each phase in sequence, the motor will rotate, one step at a time
    - With computer controlled stepping you can achieve very precise positioning and/or speed control

https://en.wikipedia.org/wiki/Stepper_motor#/media/File:StepperMotor.gif

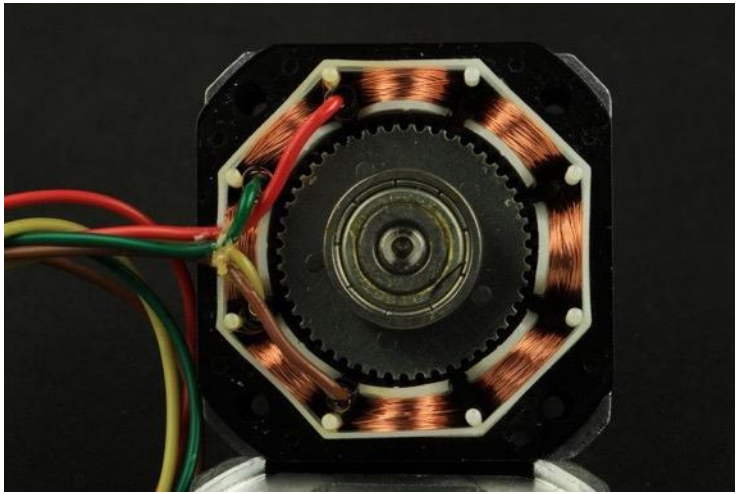

Stepper Motor Stator and Rotor

Electric Motors

- Other motors used in products and appliances:
  - Reluctance motor:
    - Similar to the brushless DC motor, however the rotor does not contain permanent magnets
    - The magnetic poles are induced in the rotor
    - Very cheap and easy to make
    - Started by similar methods to induction and universal motors
    - https://www.youtube.com/watch?v=W6LwlhsnT-k

Switched Reluctance Motor

ENGINEERS
AUSTRALIA

Teacher Development Program
Bringing schools and Engineering together

Preliminary Course – Engineered Products Module – Part 2

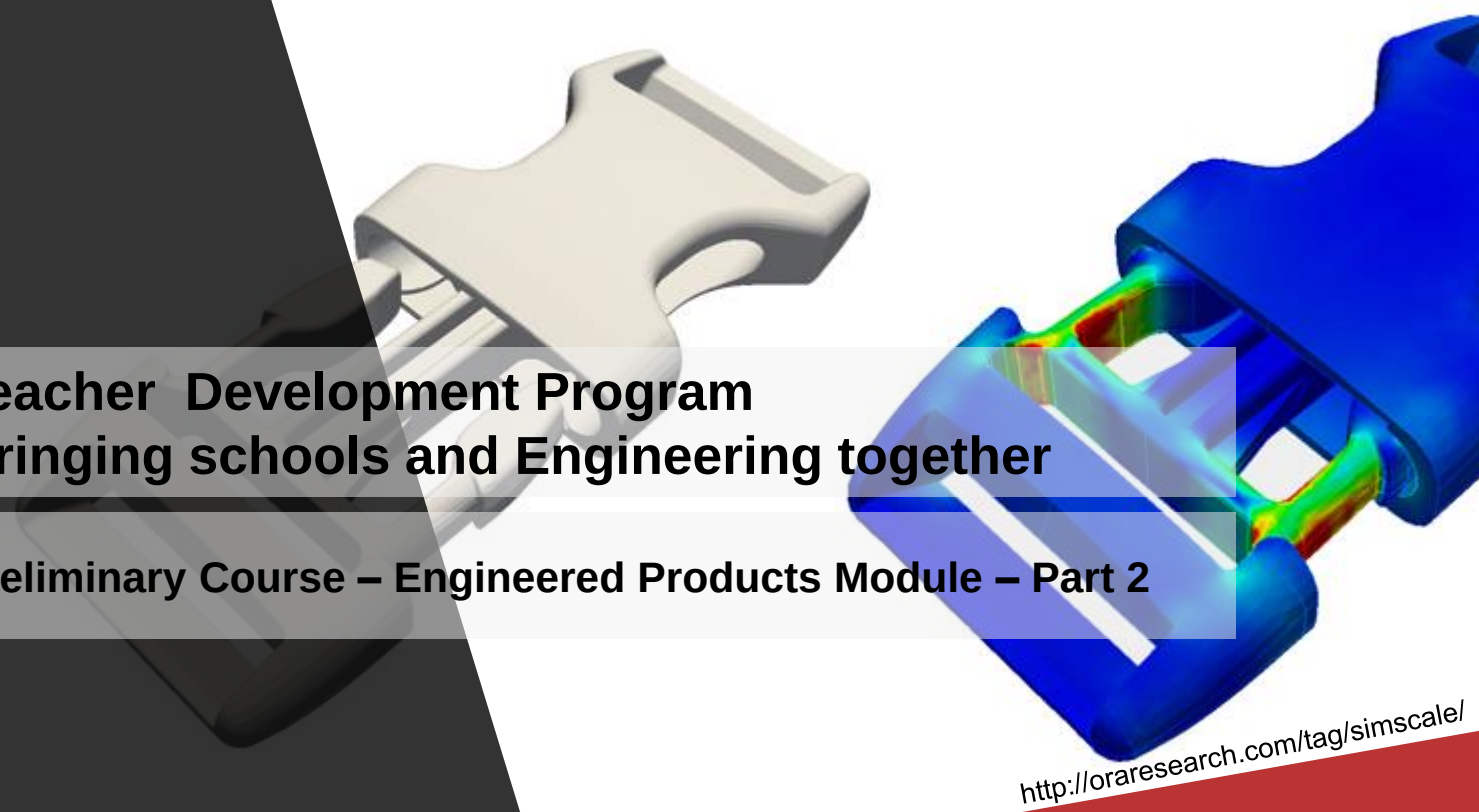

http://oraresearch.com/tag/simscale/

Case study

Gold Coast Composites intake screen and outlet diffuser head

The intake and outlet structures are subjected to number of loadings such as:

- Seabed current
- Flow rate
- Pressure (Internal & External)
- Design life is 100 years

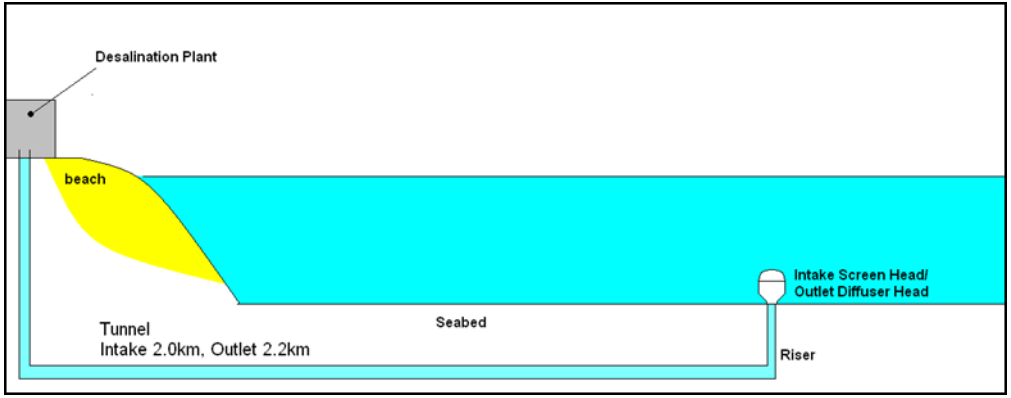

Composites – Simple description

Here we called composites what is in fact FRP or Fibre Reinforced Plastics.

- The fibres are the structural components of the materials (carrying the loads)
- The resin is the bonding agent between those fibres.

Resin
+
Catalyst

+

Reinforcement

=

Composite laminate

Ratio between the reinforcement and the resin is critical

Composites – Simple description

- There is a number of resin types showing a number of different mechanical, fire and chemical properties that will defined part of the composites properties

Polyester resin	• Orthophthalic • Isophthalic
Vinylester resin	
Epoxy resin	
Phenolic resin	
…	

Some examples of Thermoset resins

Composites – Simple description

- As for the resins, the fibres have different properties that will partly defined the properties of the composites.
- The fibre type will sometime be used to named the composites type

Glass fibre	• GRP (Glass Reinforced Plastics)
Carbon	• CFRP (Carbon Fibre Reinforced Plastics)
Aramid (Kevlar®)	
…	

Composites – Simple description

The manufacturing process will defined the fibre ratio (critical)

Therefore the process defined the composites general properties along with the type of resin/fibres

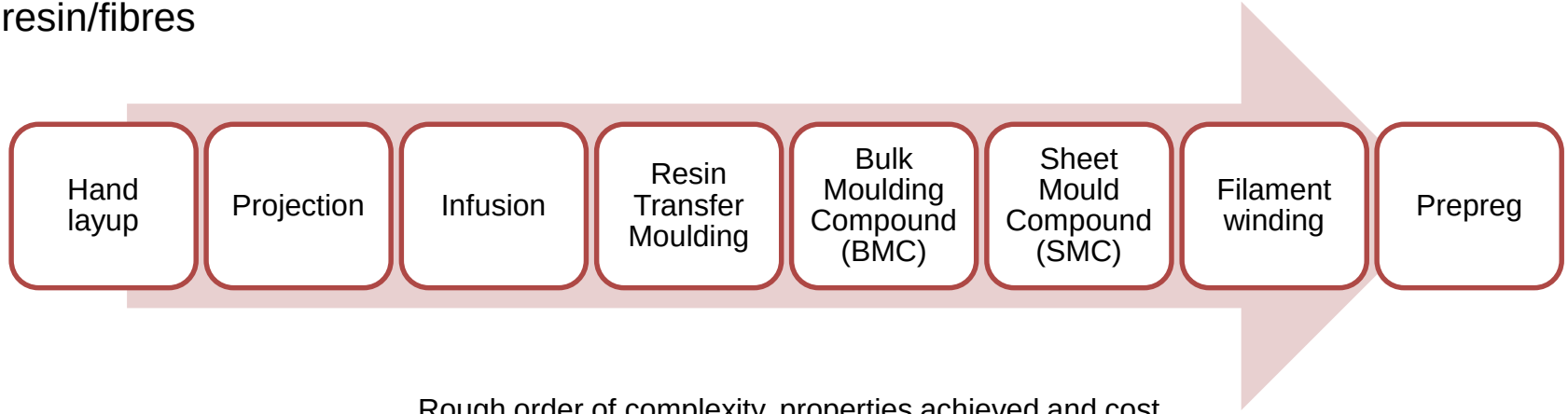

Rough order of complexity, properties achieved and cost

Composites – Simple description

Composites are renowned for a number of attributes:

- **Corrosion/chemical resistant**
- **Weight to strength ratio** (handling)
- **Maintenance free**
- **Fatigue resistance**
- Anisotropic physical properties (different according to the direction considered)
- Ballistic capability
- Fire retardancy
- Electrical Insulation

But these special properties are not necessarily all present at the same times and can be optimised to a given application.

GCDA intake screen and outlet diffuser

- Original design
  - Superduplex SAF2507 ($$$)
  - Each structures weighing 5 Tons

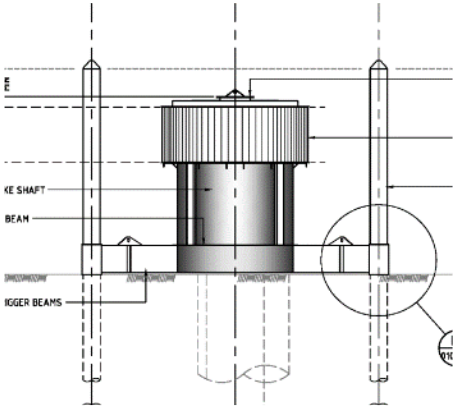

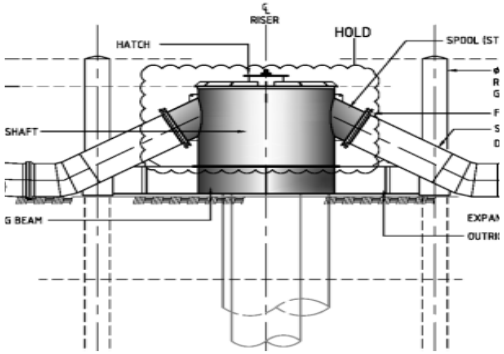

- Composites design
  - GRP/Vinylester
  - Intake is 5.5 Tons (increased capacity)
  - Outlet 3.5 Tons

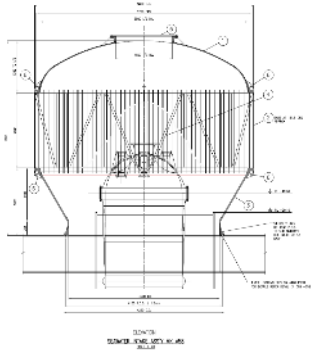

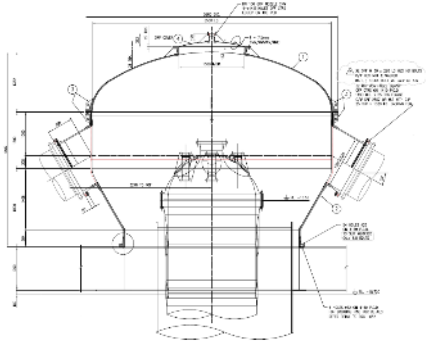

Boundary condition

- Loads
  - Self weight
  - Fluid momentum
  - current at seabed
  - Internal pressure (due to suction or ejection of fluid)

- Restraints
  - Both structure fixed on the seabed via piling

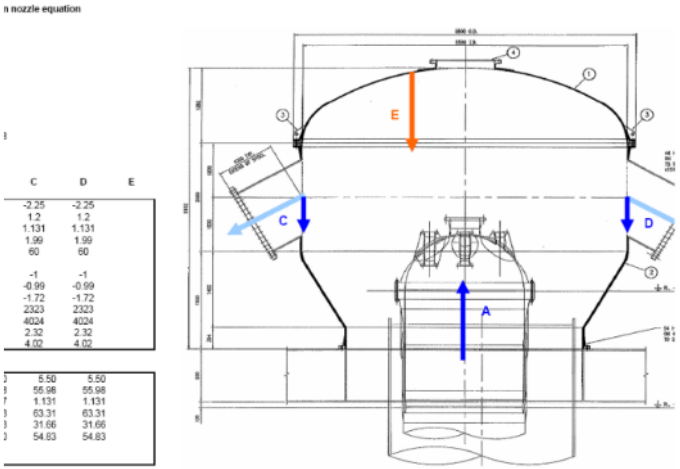

Design process

- Geometry creation
  - 3D Modeling CAD(Computer Aided Design)

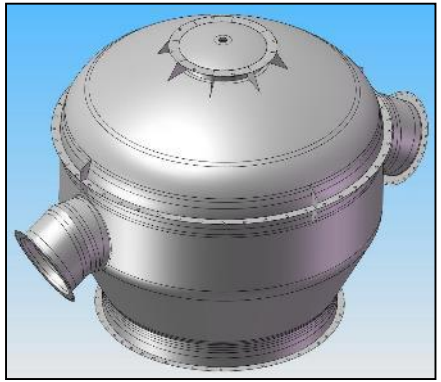

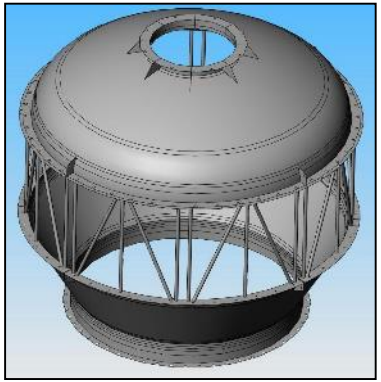

- Engineering analysis
  - FEA (Finite Element Analysis)

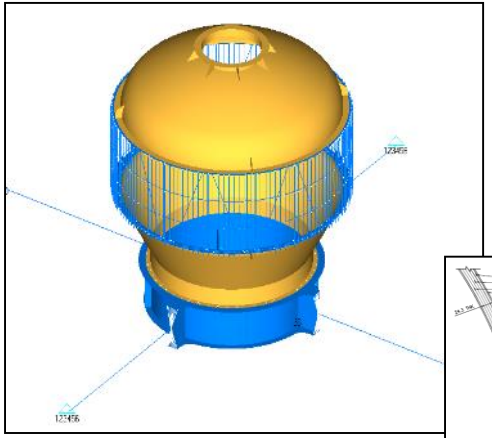

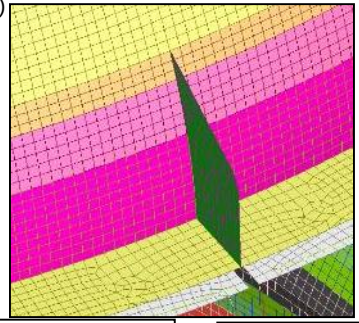

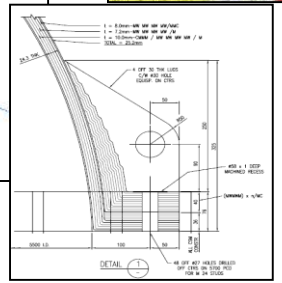

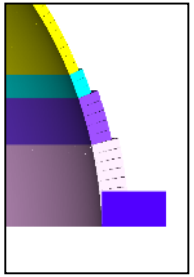

Engineered Products

- FEA provide virtual result of the behaviour of the product/structure under loads.

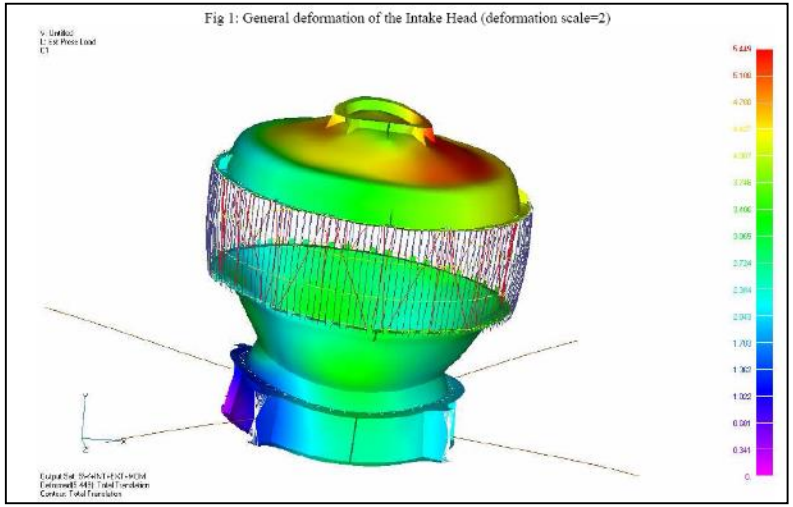

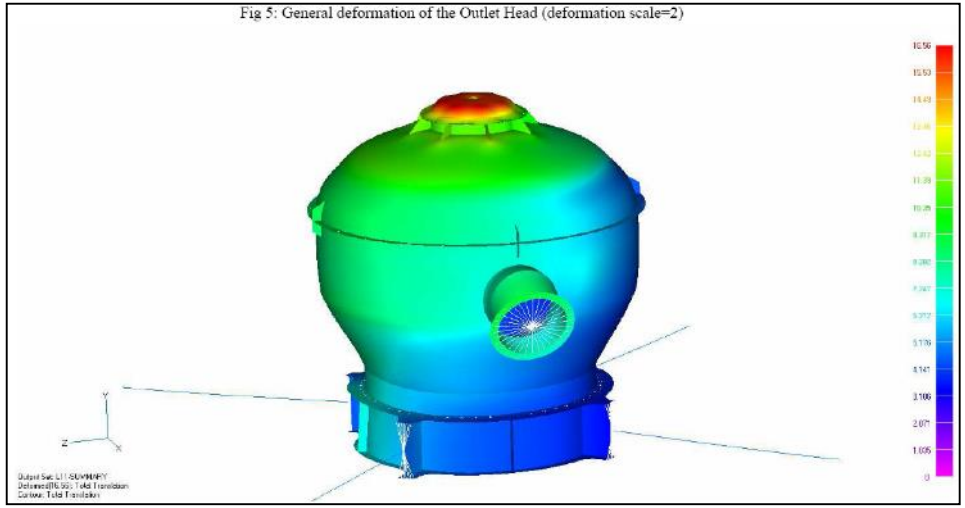

ENGINEERS
AUSTRALIA

Engineered Products

- FEA provide virtual result of the behaviour of the product/structure under loads.

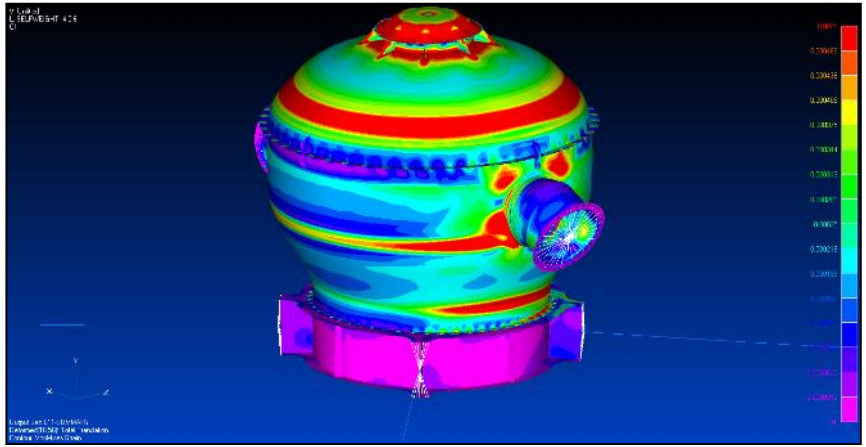

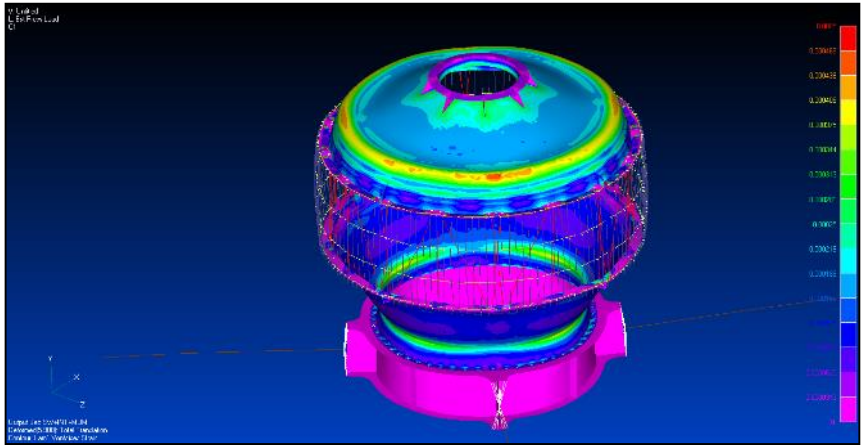

Engineered Products

- Numerical simulation (FEA) needs to be verified and supported by physical testing.

ENGINEERS
AUSTRALIA

Engineered Products

ENGINEERS
AUSTRALIA

Engineered Products

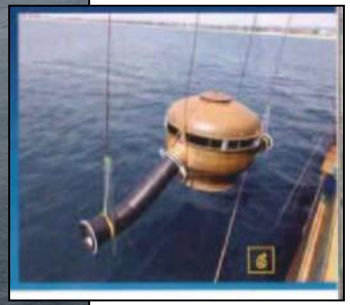

Engineers Australia is the trusted voice of the profession. We are the global home for engineering professionals renowned as leaders in shaping a sustainable world.

engineersaustralia.org.au