ENGINEERS
AUSTRALIA

Newcastle division Engineering studies

Personal & Public Transport

1 June 2015

Electric transportation systems

- Electric transport:
  - Rail:
    - DC
    - AC
    - Linear motor propelled maglev
  - Road:
    - Electric vehicles
  - Vertical transportation

Electric transportation systems

ENGINEERS AUSTRALIA

- Comparison of DC and AC Rail Systems:
  - DC powered rail:
    - Older systems DC
    - DC motor torque and speed controllable with technology available at the time
    - Electronic inverters now allow us to control torque and speed of AC motors
    - Modern trains on DC systems convert the DC to variable frequency AC
    - DC system causes electrolysis and corrosion on neighbouring systems and structures
    - Rail must be insulated from earth
    - More substations required

Electric transportation systems

ENGINEERS AUSTRALIA

- Comparison of DC and AC Rail Systems:
  - AC Powered Rail:
    - AC system does not require a separate AC feeder
    - AC motors require less maintenance (squirrel cage induction motors do not have brushgear)
    - As AC system uses single phase, unbalance occurs on the three phase system requiring compensation
    - AC locomotive has improved adhesion to the rail – AC locomotives have greater tractive effort than a DC locomotive of twice the weight

Electric transportation systems

- Comparison of DC and AC Rail Systems:
  - Voltages:
    - DC:
      - 1.5 kV (as in Sydney and Melbourne)
      - 3 kV
    - AC:
      - 25 kV (as in Brisbane)
      - 50 kV (as in northern Queensland)

Electric transportation systems

- DC railway

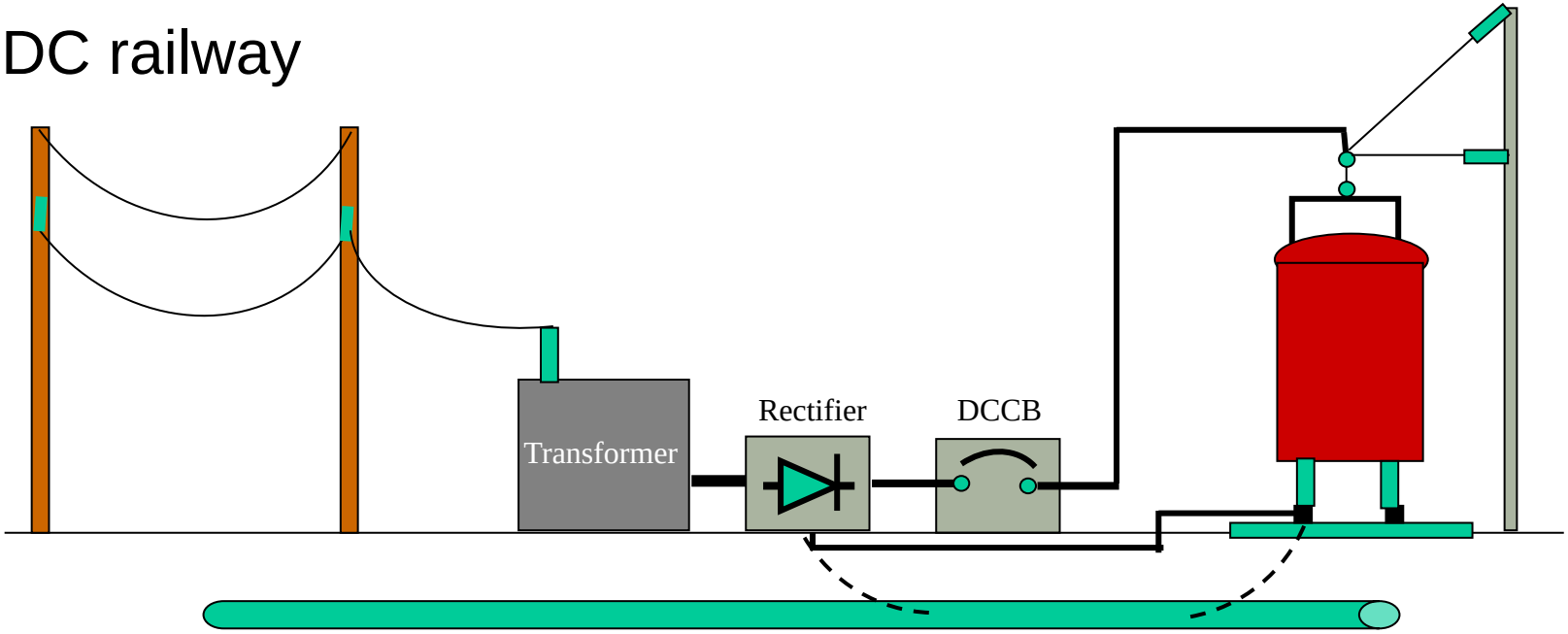

AC Feeders

Substations

DC Supply/ Feeders

Rolling Stock

Structures/ OHW

Electric transportation systems

AC Feeders

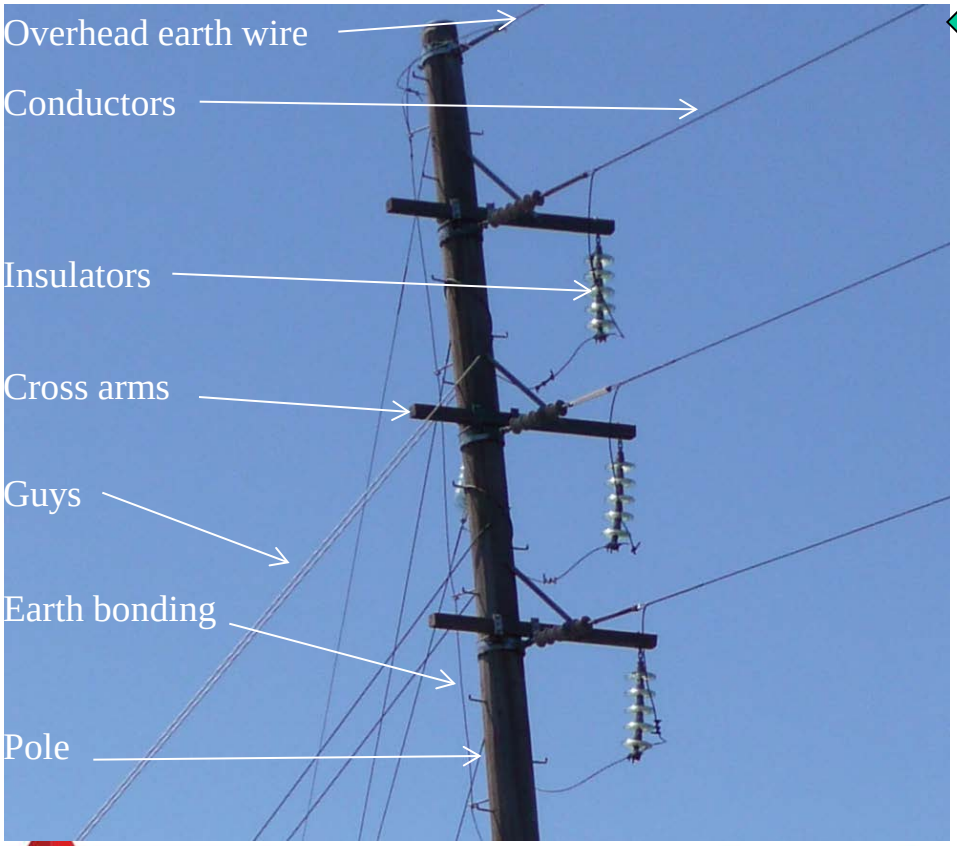

66 kV Feeder (traction)

11 kV Feeder (signalling)

Electric transportation systems

ENGINEERS
AUSTRALIA

Electric transportation systems

- DC Overhead Wiring

Electric transportation systems

ENGINEERS AUSTRALIA

- DC Third Rail

Electric transportation systems

ENGINEERS AUSTRALIA

- DC Fouth Rail (London Underground)

Electric transportation systems

- AC Overhead Wiring

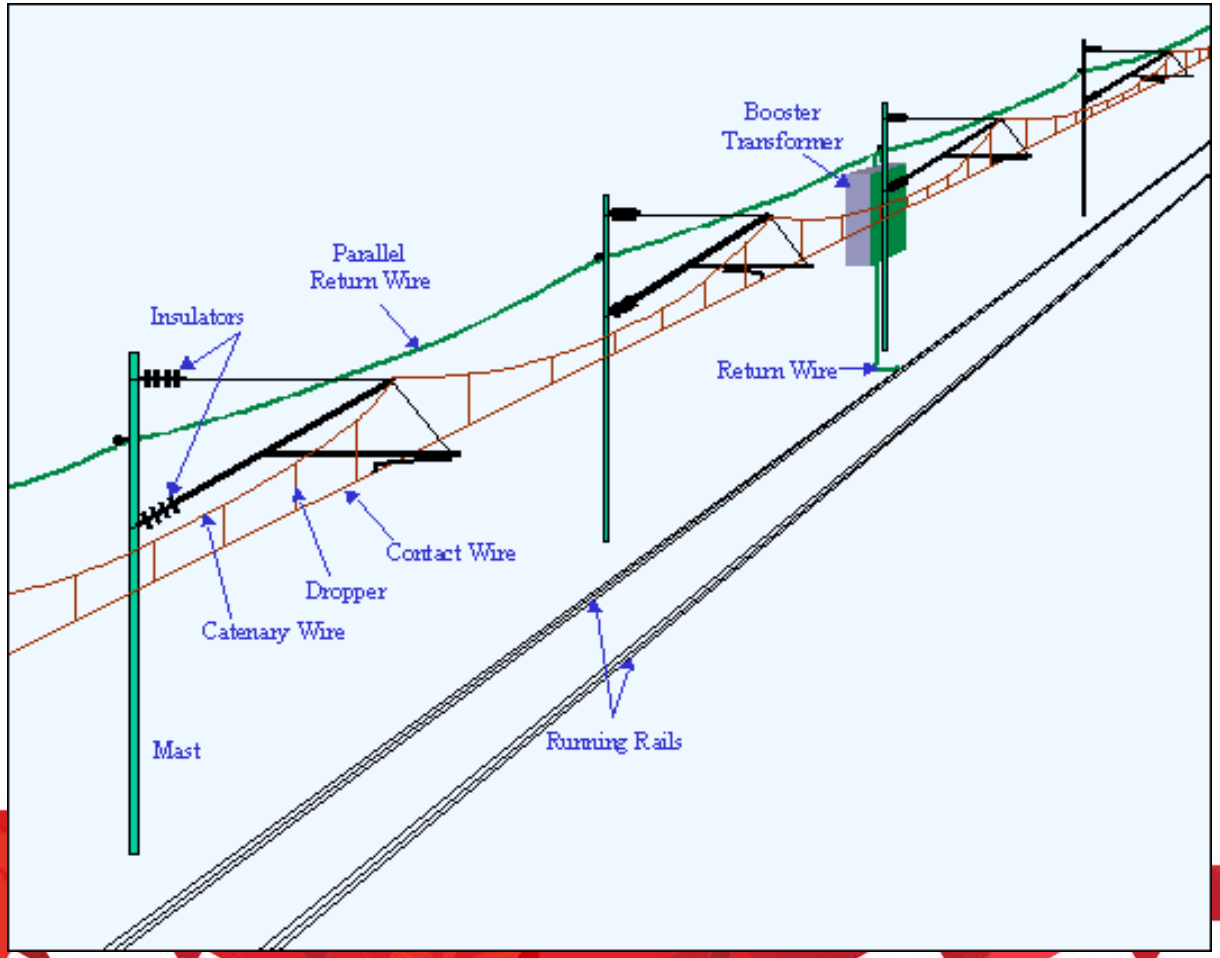

Electric transportation systems

ENGINEERS AUSTRALIA

- AC Overhead Wiring

Electric transportation systems

ENGINEERS AUSTRALIA

- AC Overhead Wiring

Electric transportation systems

ENGINEERS AUSTRALIA

- AC Locomotive

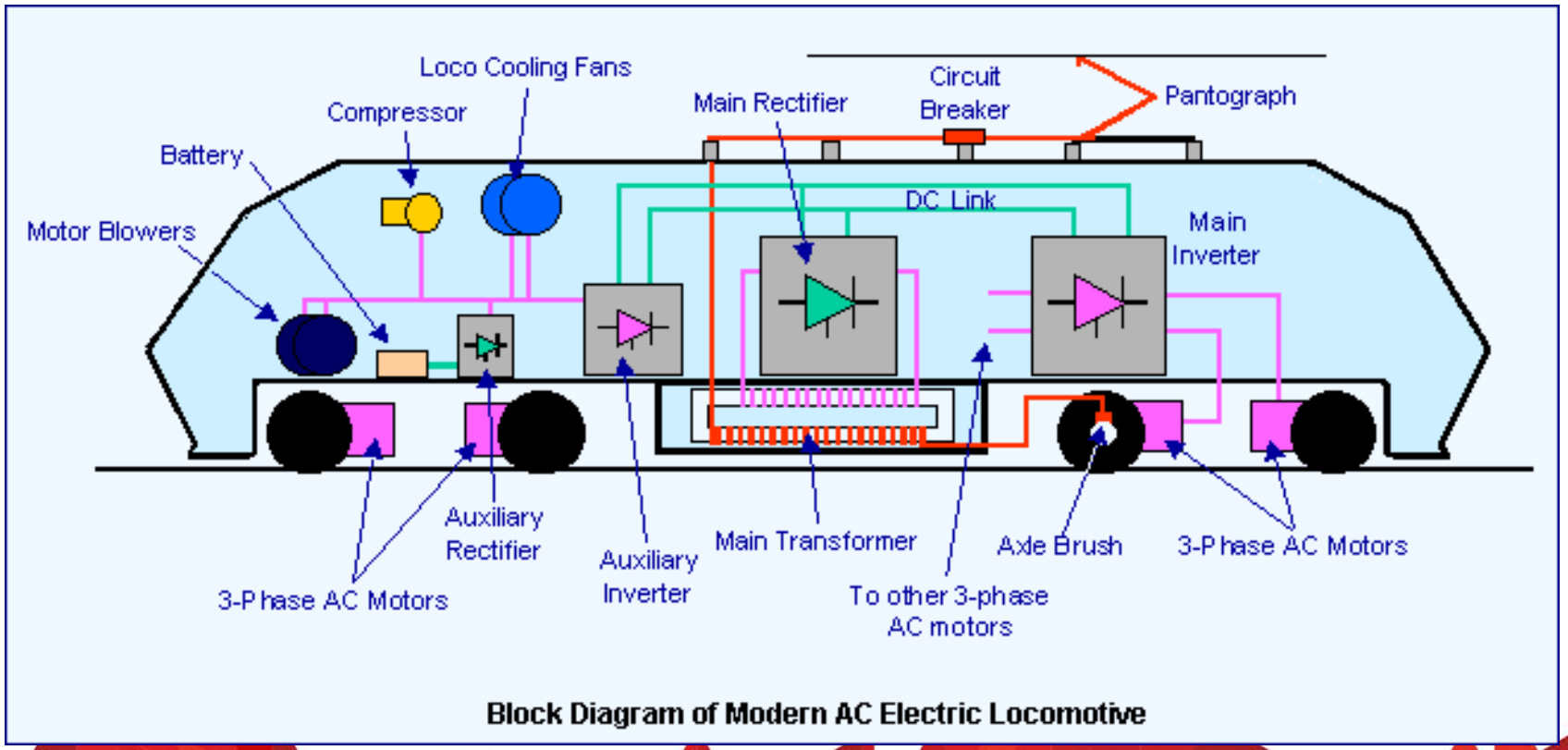

Block Diagram of Modern AC Electric Locomotive

Electric transportation systems

ENGINEERS AUSTRALIA

- AC Locomotive

Electric transportation systems

ENGINEERS AUSTRALIA

- Traction motor comparison

DC Motor - Brushgear

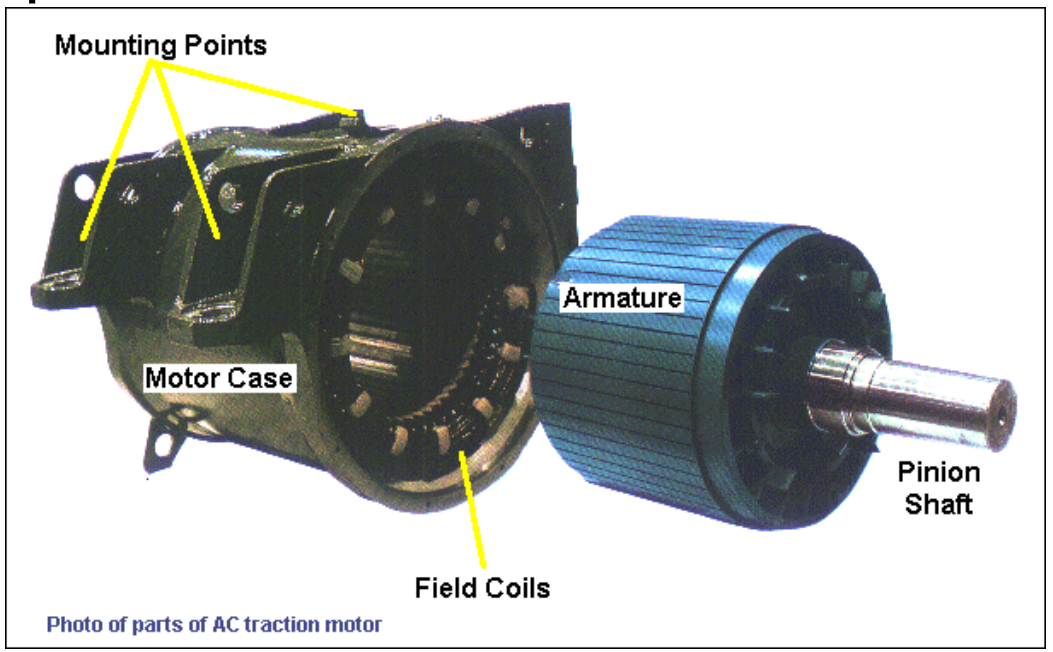

AC Motor – no Brushgear

Electric transportation systems

- Motor speed control (DC):
  - Speed is controlled by varying the motor voltage
  - Direction is reversed by changing polarity of the field coils

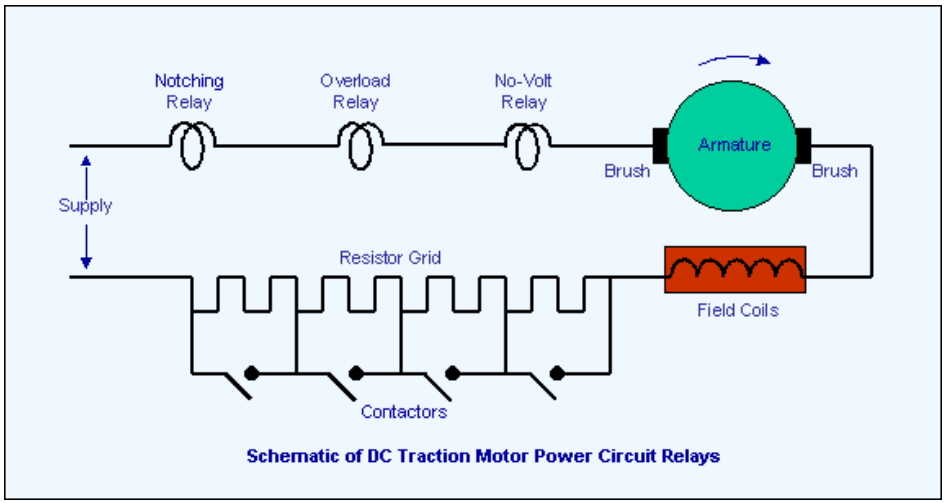

Older method

Modern DC motor speed controlled by controlling motor voltage with an electronic
DC – DC converter

Electric transportation systems

- Motor speed control (AC):
  - Speed is controlled by varying the motor frequency and voltage
  - Direction is reversed by changing two phases of the three phase motors

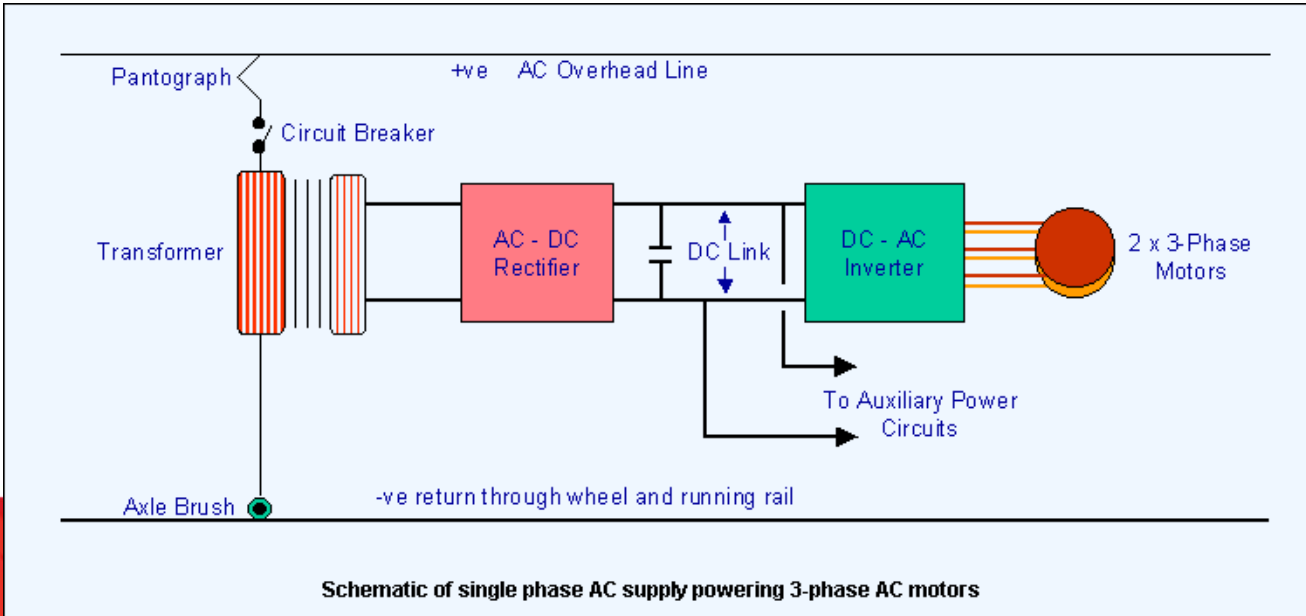

Schematic of single phase AC supply powering 3-phase AC motors

Electric transportation systems

- Motor speed control:
  - The speed of an electric motor is controlled by comparing the actual speed with the requiring speed and using the difference between these to correct the speed

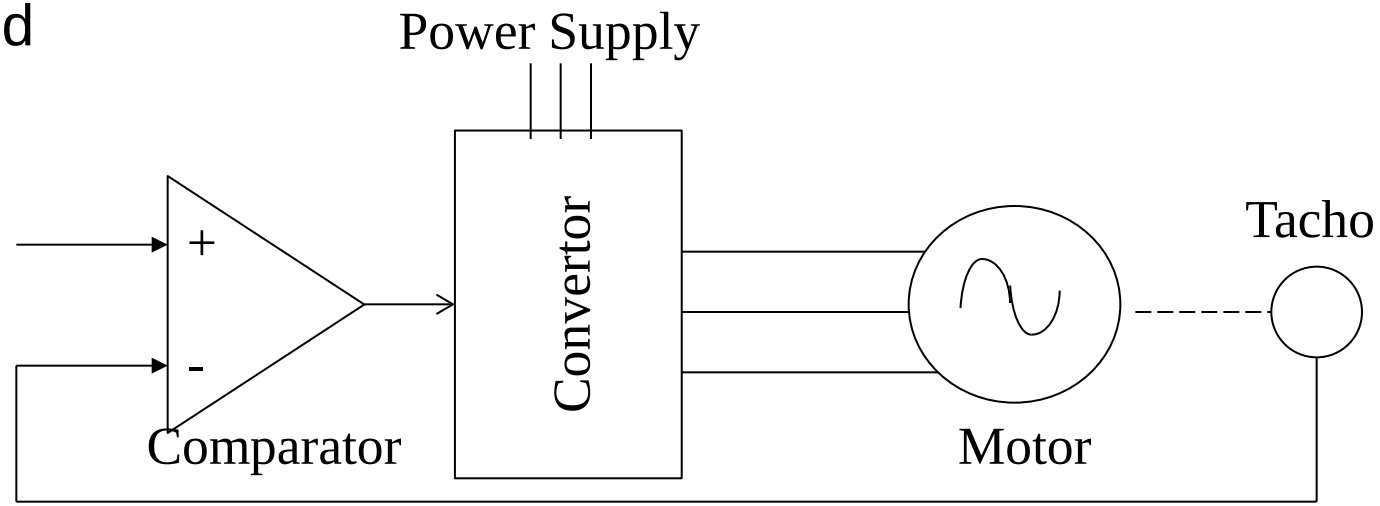

Personal and Public Transport

ENGINEERS AUSTRALIA

- Magnetic Levitated Train (Maglev Train):
  - Motor for maglev trains is embedded in the track
  - Track creates a traveling magnetic field beneath the train, which lifts the cars and propels them at 450-plus kph
  - Train's on-board systems are powered by induction from the track
  - Only the section of track under the train is energized

Personal and Public Transport

- Maglev Train

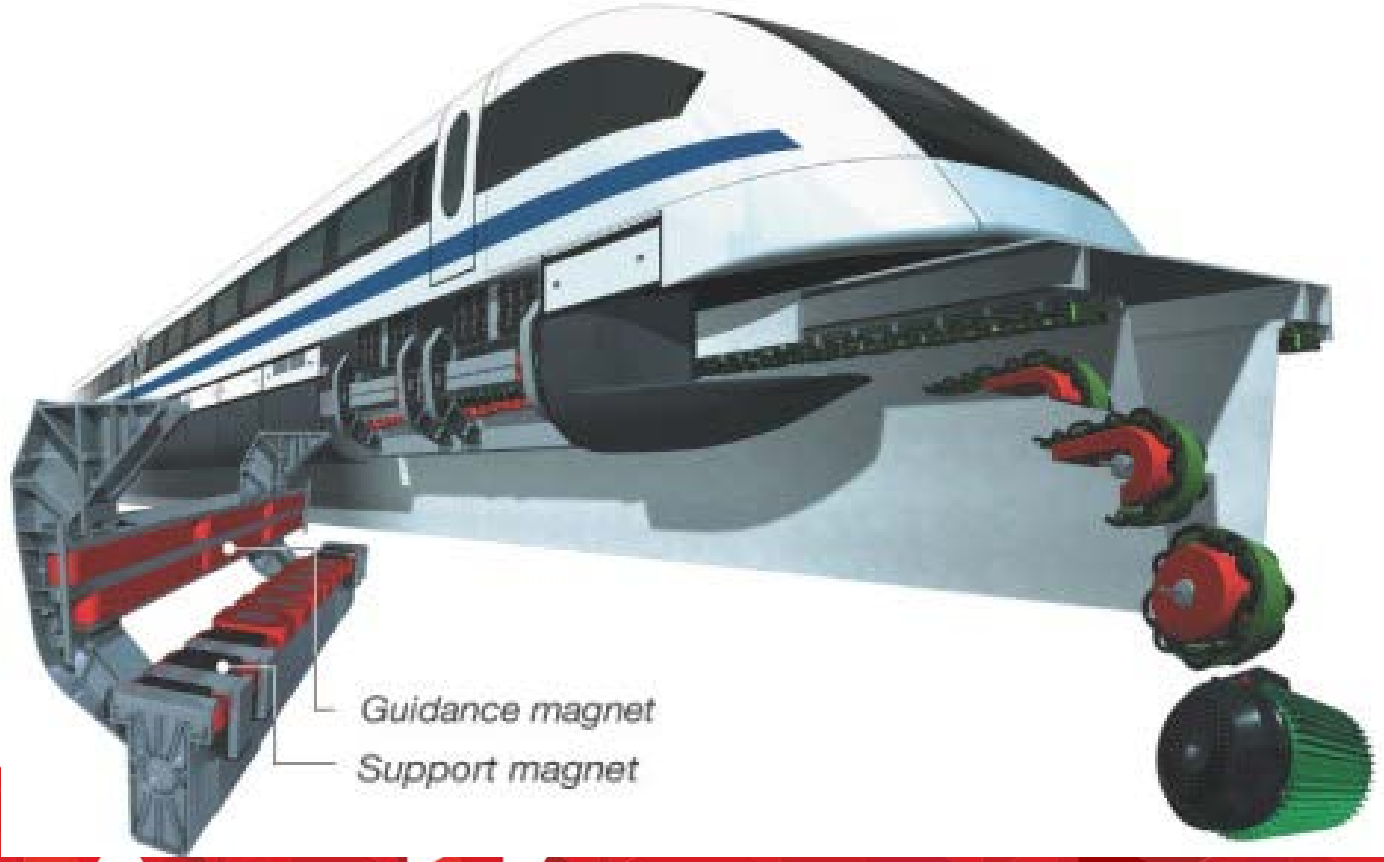

Personal and Public Transport

- Electric Vehicle:
  - Hybrid (battery + internal combustion engine):
    - Extended range
    - Still needs fuel
  - Electric (battery only):
    - Limited range
    - No fuel needed
    - Requires external changing

Personal and Public Transport

ENGINEERS AUSTRALIA

- Electric Vehicle:

Personal and Public Transport

- Electric Vehicle:

Motor control

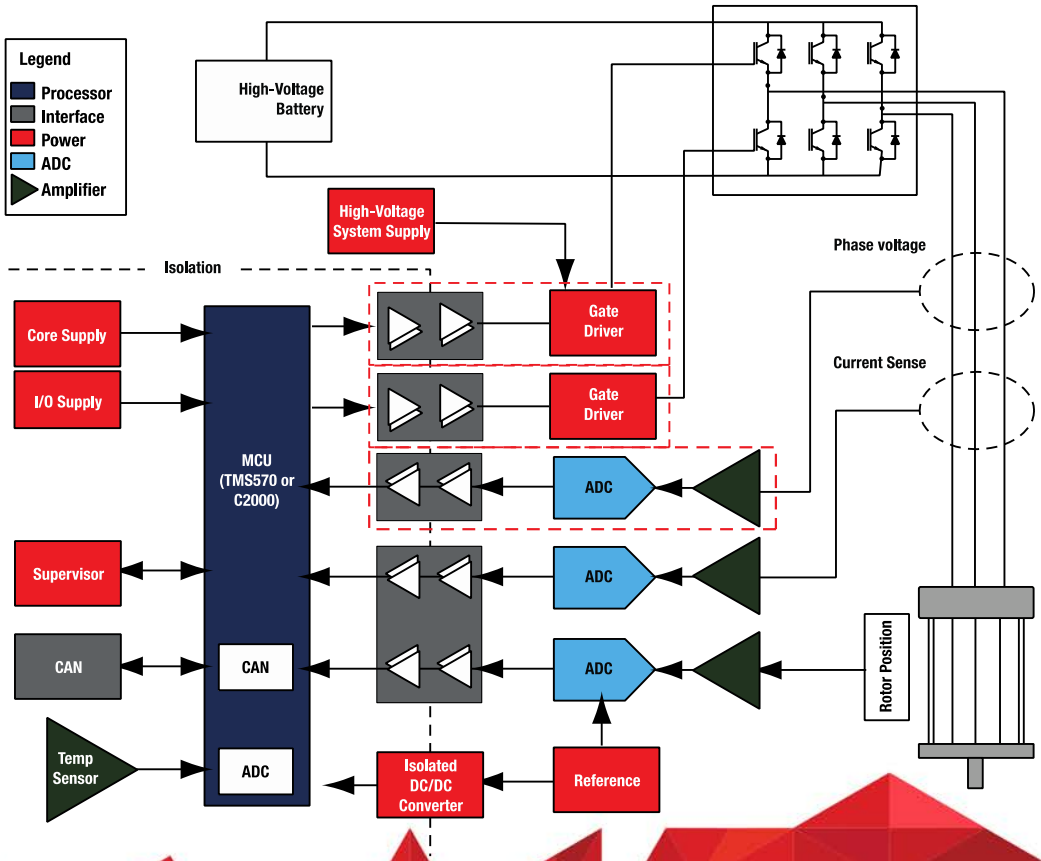

Personal and Public Transport

ENGINEERS AUSTRALIA

- Electric Vehicle Motors:
  - Most EVs use permanent magnet motors:
    - Better efficiency over a wider speed range
    - Precise speed control
    - Less losses (loss from rotor bars in induction machine)
    - Overall a more power-dense (i.e. smaller) efficient motor
  - Move back to induction motors however:
    - Availability of rare earths for the magnets

Personal and Public Transport

- Electric Vehicle Motors:

The challenge for electric traction motors: rare earth cost-levels and cost-volatility

Cu

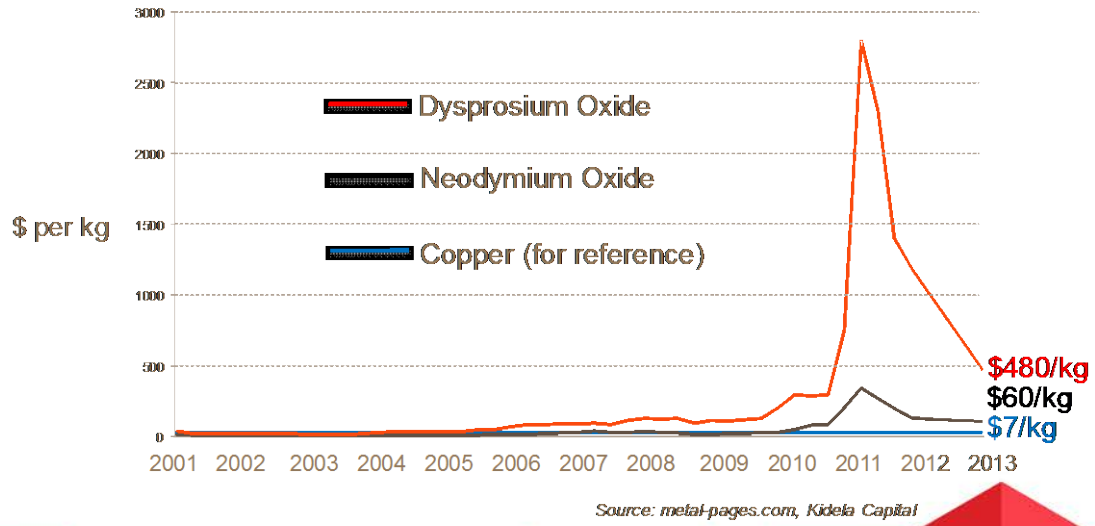

Source: metal-pages.com, Kidela Capital

Personal and Public Transport

ENGINEERS AUSTRALIA

- Electric Vehicle Motors:

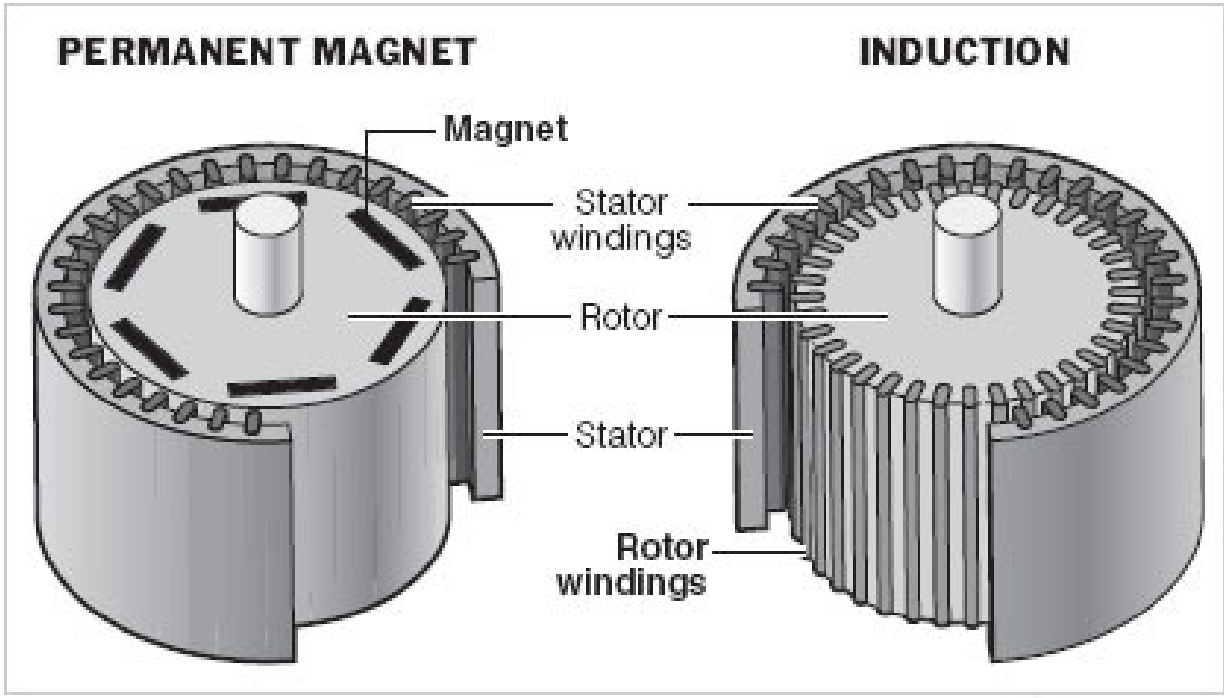

Personal and Public Transport

- Vertical transportation:
  - Elevators
  - Escalators
  - Moving walkways

Personal and Public Transport

- Vertical transportation:
  - The elevator:
    - Design approach:
      - Past experience
      - Supplier standards
      - Economic considerations
      - Architectural considerations
      - Limitation of design life/ maintenance periods

Personal and Public Transport

ENGINEERS AUSTRALIA

- Vertical transportation:
  - The elevator:
    - Today modelling applied:
      - Establish traffic patterns
      - Determination of peak passenger demand
      - Mathematical modelling

Personal and Public Transport

- Vertical transportation:
  - The elevator:
    - Mathematical modelling:
      - » Round trip time (RTT) dependent upon
        - » Capacity factor
        - » Passenger loading and unloading times
        - » Average number of stops
        - » Door opening and closing times and transit time
        - » Etc
      - » Modelling then based on expected distribution of passengers

Personal and Public Transport

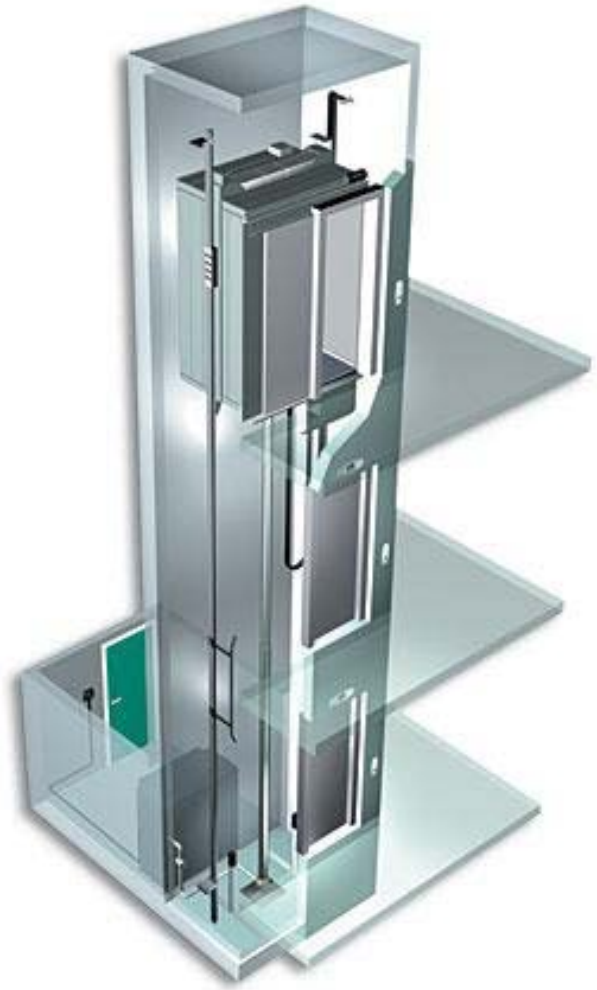

Vertical transportation:

- The elevator drive:
  - Traction:
    - Upfront costs higher
  - Hydraulic:
    - Energy costs higher

Electrical Safety

- All of these vehicles use lethal voltages
- Only trained personnel are to work on them
- Remember the usual safety hazards of machinery:
  - Stored energy in:
    - Springs
    - Batteries and capacitors
  - Risk of accidental start
  - Risk of falling

Electrolysis

- In the rail environment:
  - The electrolyte is the moist earth with its dissolved salts
  - The electrodes are the rails and the buried structures

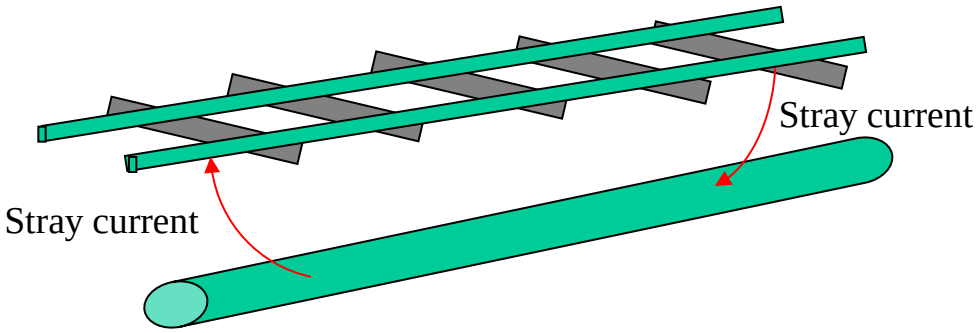

Electrolysis

- The structure (in this case a copper pipe) will erode at the point where the current leaves the structure

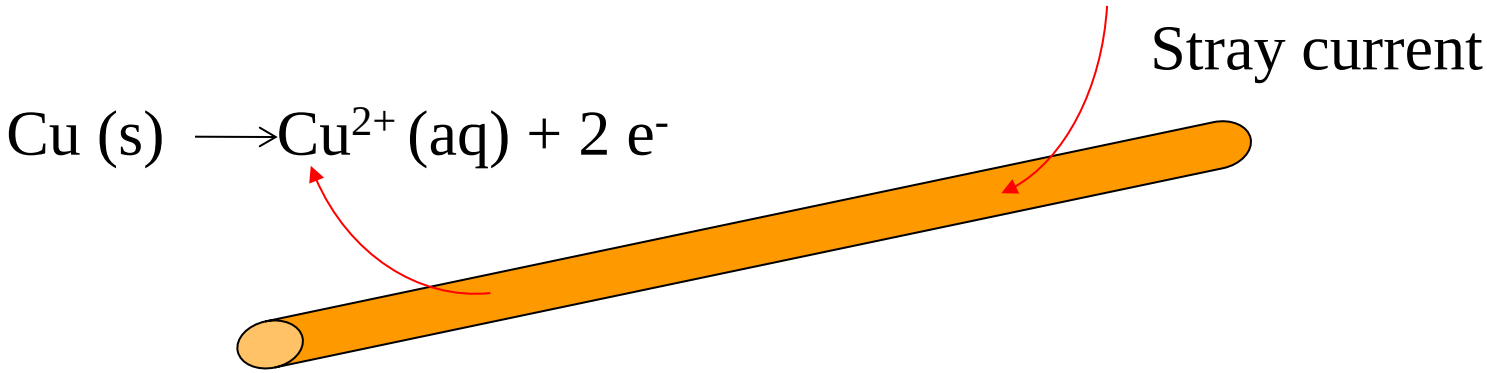

Electrolysis

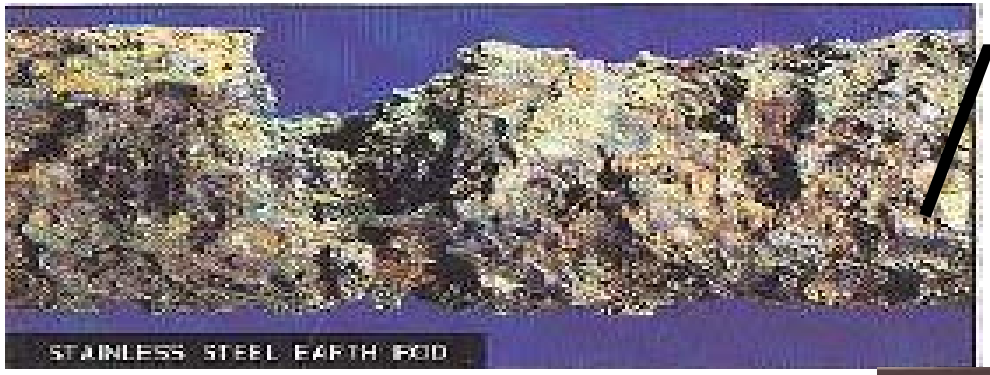

Stainless Steel Earth rod

Concrete Power Pole

33kv Cable

Copper Pipe

Electrolysis

Electrolysis

www.engineersaustralia.org.au